2-Way Spool Type Pressure Reducing Valve (DMO) ISO 7368 NB 16 – NB 50

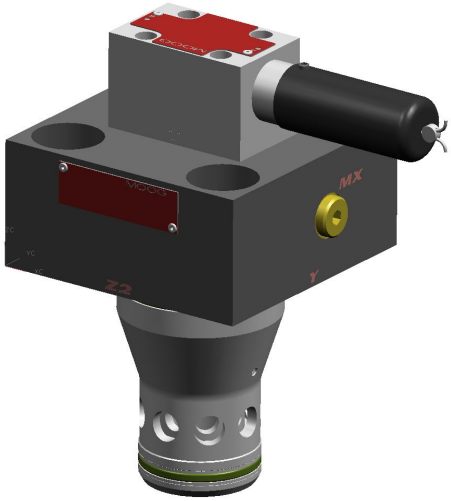

General Description

2-way pressure reducing valves are used to reduce a variable input pressure (primary pressure at B) to a lower, constant output pressure (secondary pressure at A).

The reduced pressure can be set using a pressure relief valve on the valve cover. Depending on configuration, this valve can also function as a pressure compensator.

The preferred mode of mounting is the manifold block which, depending on the hydraulic circuit for the specific application, can be equipped with several interconnected valves.

The valves are available as “normally open” or “normally closed” versions.

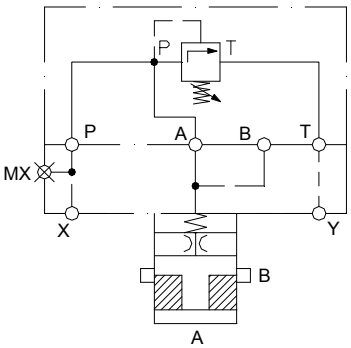

Benefits

- Maximum operating pressure: 350 bar
- Improved flow characteristics compared to series B
- Can be used with standard series D covers (RM or 1W)
- Available in multiple configurations

Sizes

- NB 16
- NB 25
- NB 32
- NB 40
- NB 50

Operating Principle

A DMO type pressure reducing valve is a spool type valve without an effective surface in port B. The effective surfaces in port C and in operational port A are of equal size (surface ratio 1:1).
The flow direction is from B to A.

As port B is pressurized, oil will flow from B to A. As the pressure in port A approaches the set pressure value of the limiting valve, the spool will move towards the closed position throttling the oil flow. As the pressure in port A exceeds the set pressure value, the spool will close port A and the oil flow will be interrupted.

Depending on the hydraulic circuit and the adaptation of suitable standard covers; a DMO type valve can also be used, for example, in flow-control functions as a pressure compensator.

Pilot Valve DBD

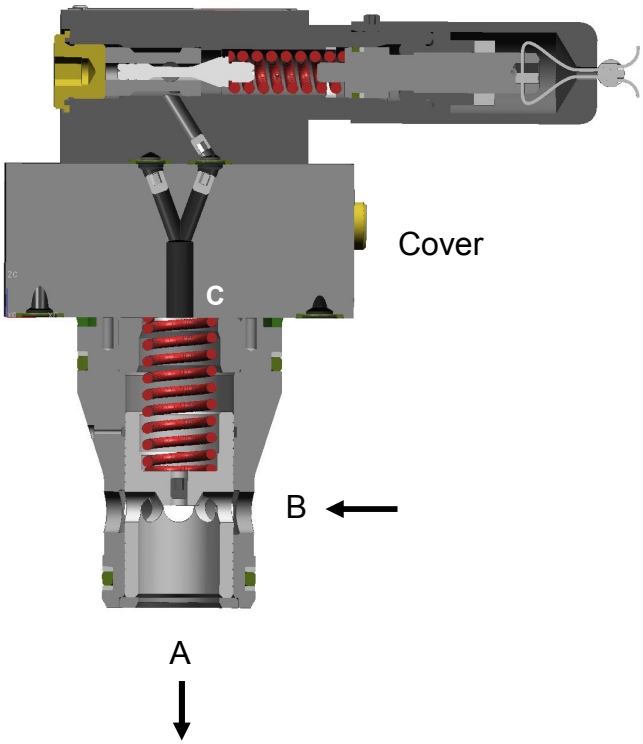

Specification

General data	Value	Unit	Specification				
Mode of Construction	-	-	2-Way Spool Type Pressure Reducing Valve				
Type	-	-	DMO (Manual Pressure Adjustment)				
Design	-	-	Cartridge Valve				
Mounting style	-	-	Manifold Cartridge Mounting				
Nominal size	NB	-	16	25	32	40	50
Mounting dimensions according ISO 7368-...	-	-	BA-06-2-A	BB-08-2-A	BC-09-2-A	BD-10-2-A	BE-11-2-A
Mounting position	-	-	Any				
Flow Direction	-	-	B ➔ A				
Operating pressure	max.	MPa	35				
Ambient temperature range	min.	°C	-30				
	max.	°C	+80				
Seals* for hydraulic fluids	-	-	FKM+PU	➔ M-DMO, hydraulic fluids on mineral oil basis			
			FKM	➔ V-DMO, hydraulic fluids on mineral oil basis, HFD-hydraulic fluids			
			NBR	➔ N-DMO, hydraulic fluids on mineral oil basis, HFC-hydraulic fluids			
Hydraulic fluid temperature range	-	°C	-30 to +80	NBR			
			-10 to +80	FKM + PU			
Viscosity range	min.	mm²/s	2,8				
	max.	mm²/s	380				
Operating viscosity	-	mm²/s	15 to 45				
Cleanliness to ISO-Code	max.		ISO 4406 (C) class 20/18/15				

* PU: Polyurethane; FKM: Fluorosilicone rubber (Viton®); NBR Nitrile rubber (Buna N); Other hydraulic fluids on request

Basic Configuration Of A Pressure Reducer / Compensator

Basic Configuration

(1) Pressure reducing valve
- Standard RM cover
- Pilot oil supplied over port X
- Pilot oil tap on port A
- Without sandwich cover (max 3 bar spring)
- NB 16 to NB 40

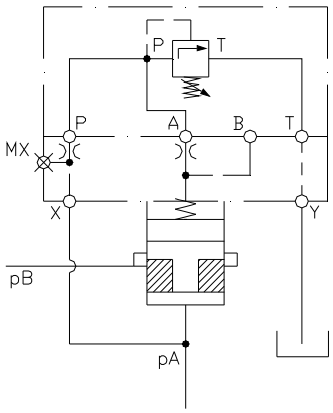

(2) Pressure reducing valve
- Standard RM cover
- Pilot oil supplied over port X
- Pilot oil tap on port A
- With sandwich cover for 8 bar spring
- NB 16 to NB 40 (NB 50 with 3 bar spring)

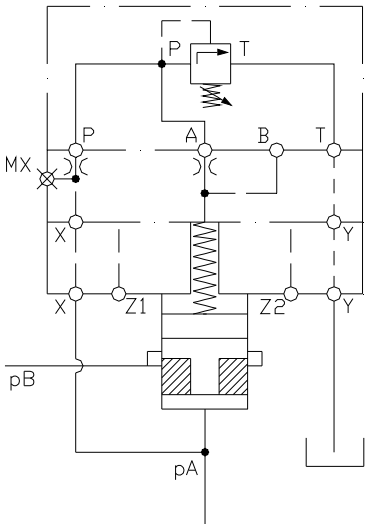

(3) Pressure reducing valve
- Standard 1W cover
- Pilot oil supplied over 2-way flow controller
- Pilot oil tap on port B
- Y port connected to tank
- NB 16 to NB 50
- Higher flow rates possible compared to configurations (1) and (2)

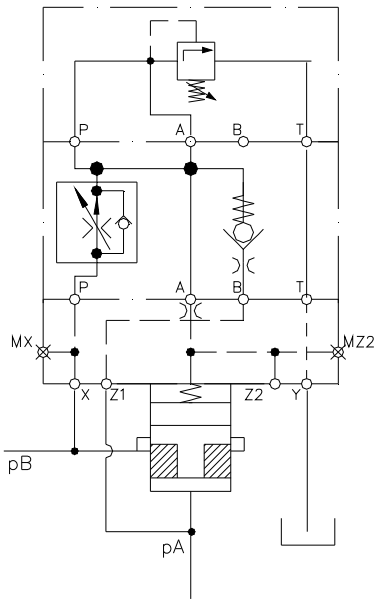

(4) Pressure compensator valve (upon request)
- Standard RM cover
- Pilot oil supplied over 2-way flow controller
- Pilot oil tap on port B
- Y port as pressure load tap downstream of the throttle valve
- NB 16 to NB 40 (NB 50 with sandwich cover)

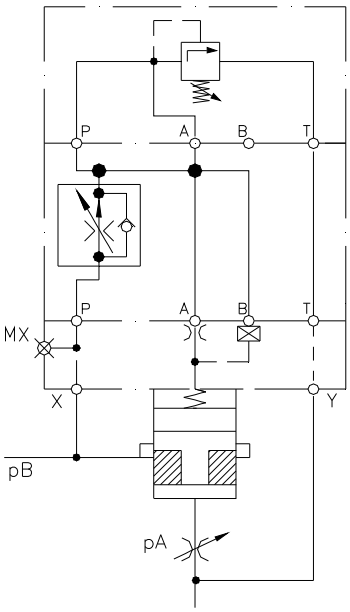

Characteristic Curves

Conditions: system pressure 350 bar, oil temperature 40 °C, oil viscosity 32 cSt

(Blue = performance limit with 3 bar spring, Red = performance limit with 8 bar spring)

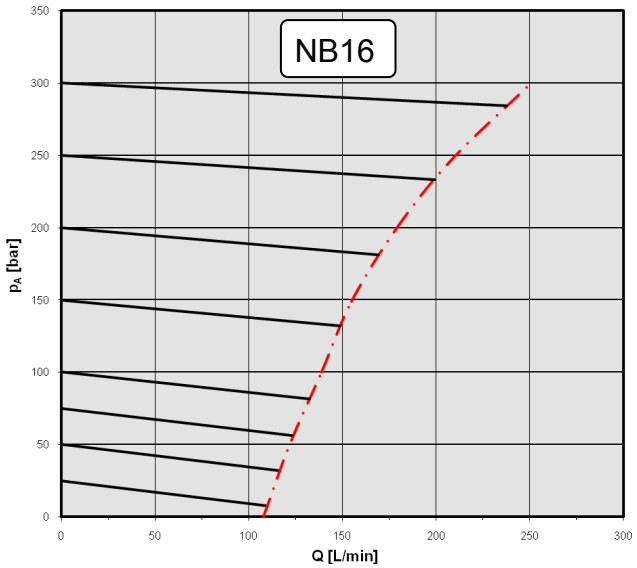

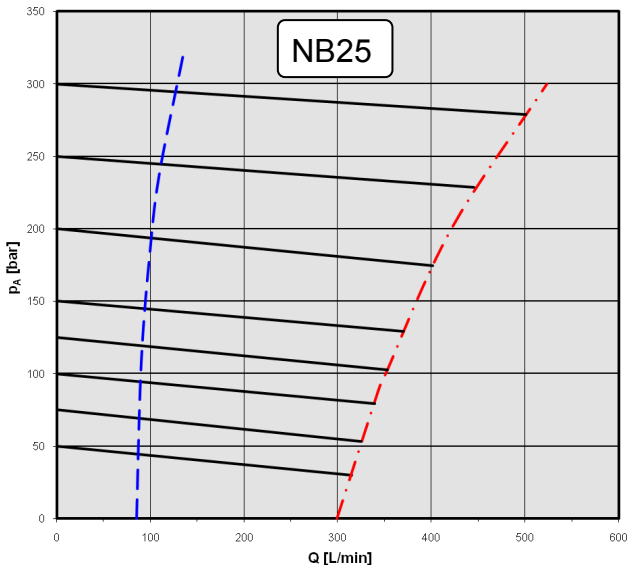

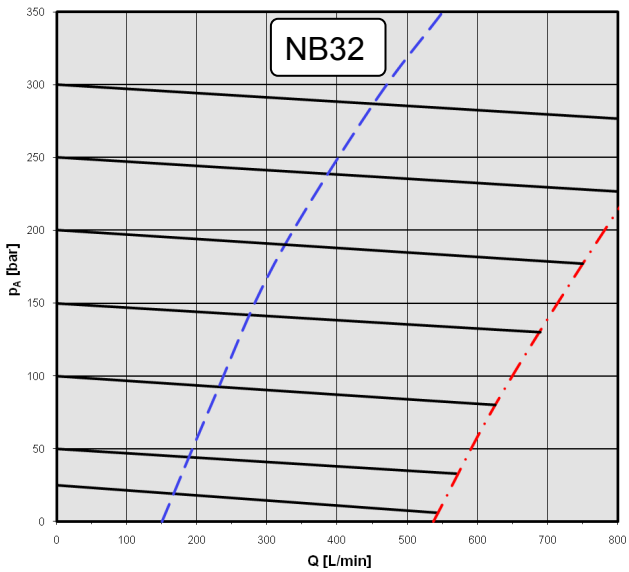

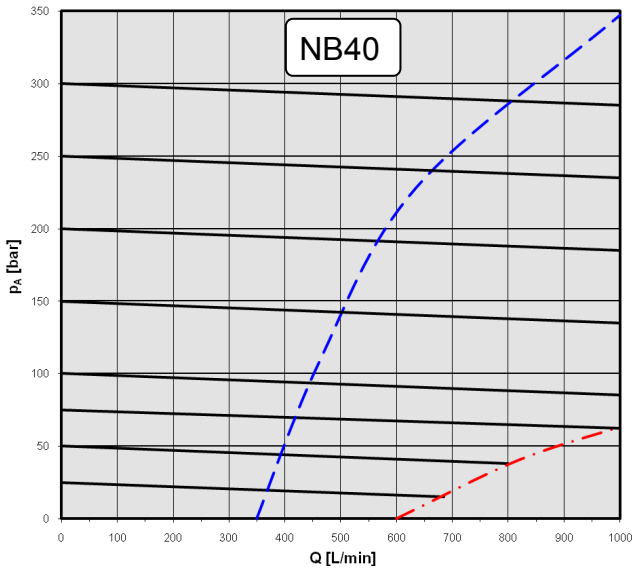

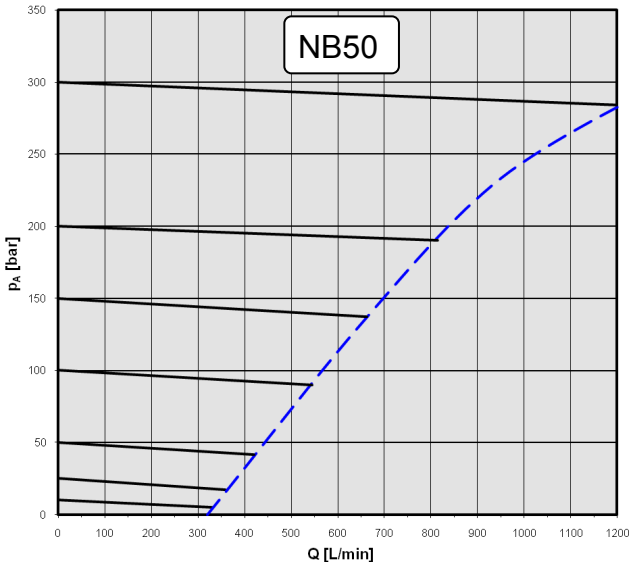

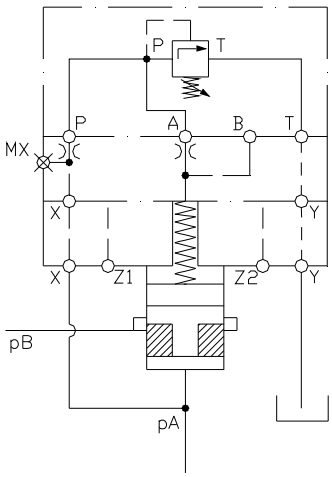

Characteristic Curves

Conditions: system pressure 350 bar, oil temperature 40 °C, oil viscosity 32 cSt

(Red = performance limit with 0,5 bar spring)

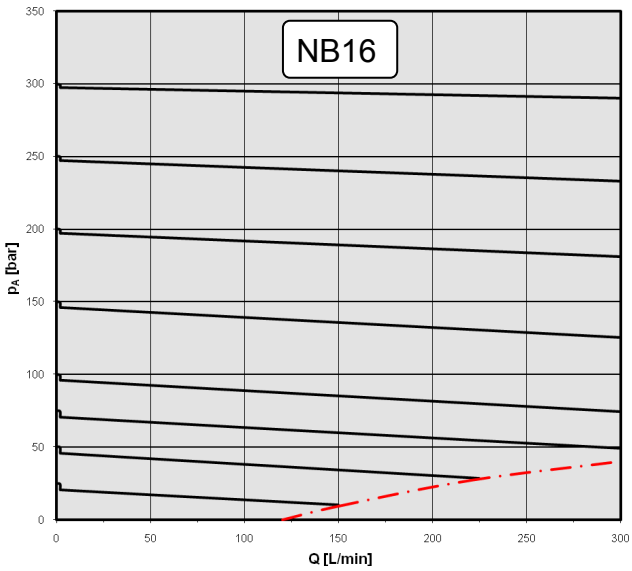

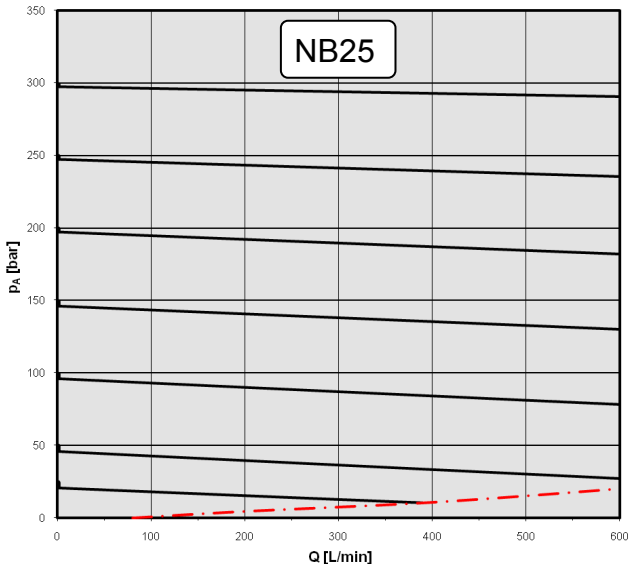

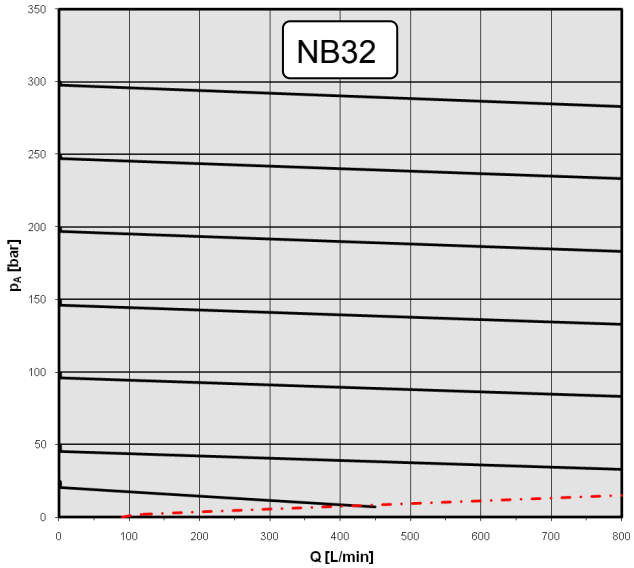

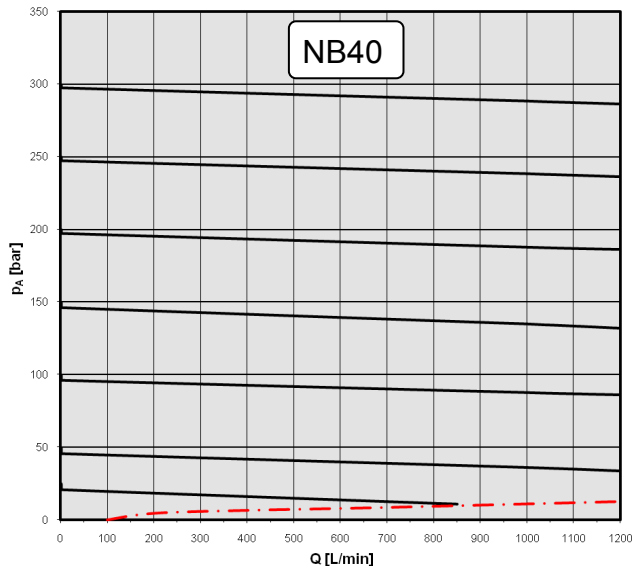

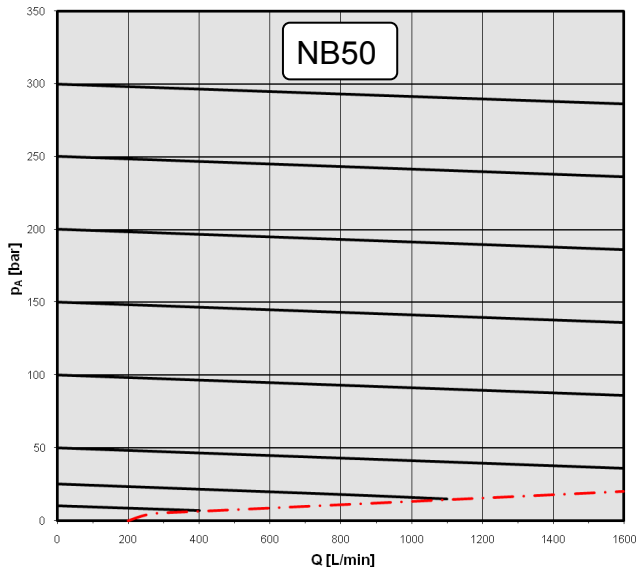

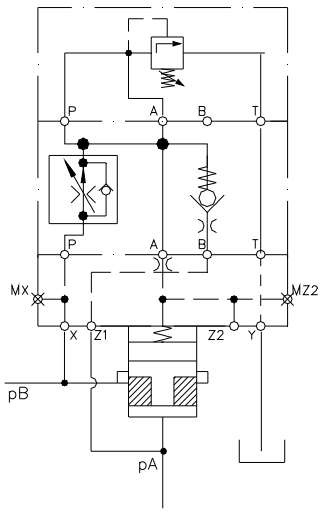

Dimensions

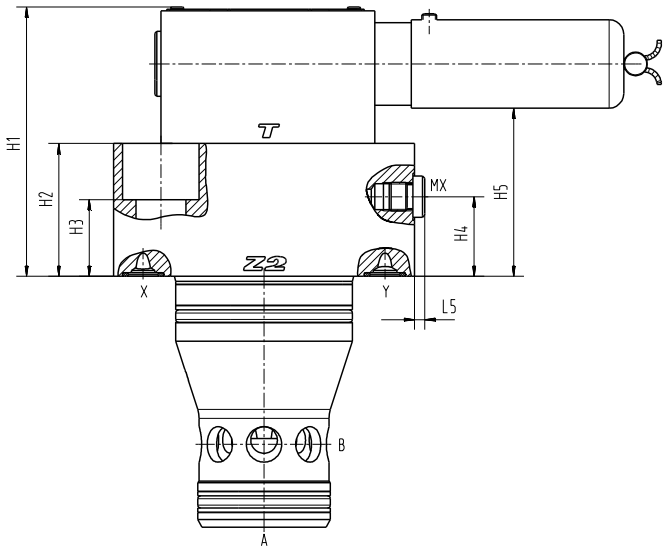

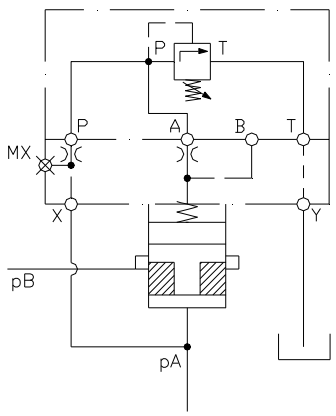

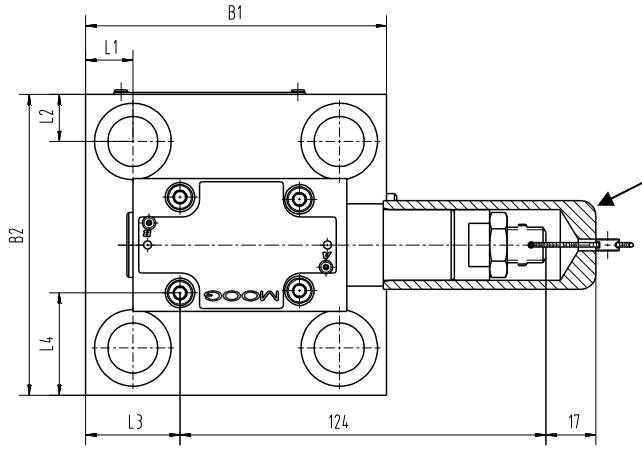

Adjustment methods available
2: allen head screw with jam nut
8: method 2 + cap + seal
(pressure set and sealed)

	NB 16	NB 25	NB 32	NB 40	NB 50 [2]
H1 [mm]	82	87	92	106	166[3]
H2 [mm]	35	40	45	60	120[3]
H3 [mm]	23	22	26	39	99[3]
H4 [mm]	-	-	27	30	90[3]
H5 [mm]	47	52	57	72	182[3]
B1 [mm]	80[1]	85	102	125	140
B2 [mm]	65	85	102	125	140
L1 [mm]	9,5	13,5	16	20	20
L2 [mm]	9,5	13,5	16	20	20
L3 [mm]	7	23,5	32	43,5	51
L4 [mm]	16,25	26,25	34,65	46,25	53,75
L5 [mm]	-	-	3,5	4,5	4,5
Plugs MX	-	-	G 1/8“	G 1/4“	G 1/4“
Mounting Screws ISO 4762-12.9	M8x35	M12x40	M16x50	M20x70	M20x130
Tightening Torque [Nm]	30	100	300	550	550
Weight [kg]	2,9	3,9	5,5	9,6	20,7

[1] Dimension B1 is larger than specified by ISO 7368
[2] NB50 delivered standard with sandwich cover (H1=166 mm)
[3] For NB50 with 0,5 bar spring subtract 60 mm from dimension given

Option: Sandwich cover for 8 bar spring NB16...NB40 (NB50 using max. 3 bar spring)

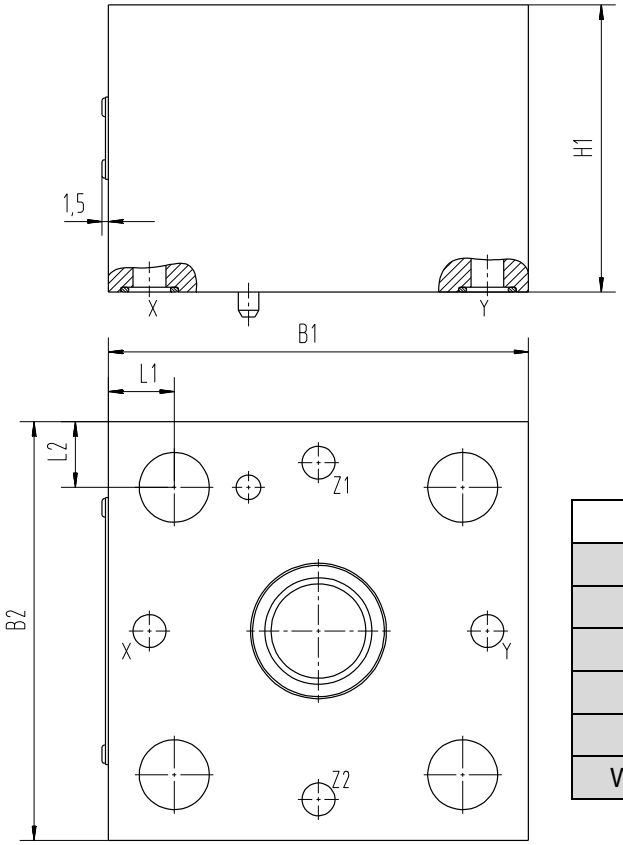

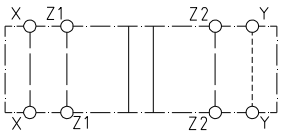

	NB 16	NB 25	NB 32	NB 40	NB 50
H1 [mm]	30	40	70	90	60
B1 [mm]	80	85	102	125	140
B2 [mm]	65	85	102	125	140
L1 [mm]	9,5	13,5	16	20	20
L2 [mm]	9,5	13,5	16	20	20
Weight [kg]	0,9	2	4,8	9,3	7,2

Option: 2-way flow control (NB06) using a sandwich plate (weight 1,25 kg)

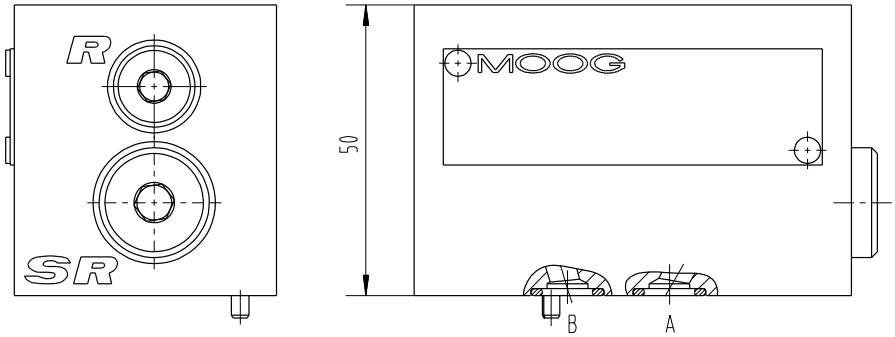

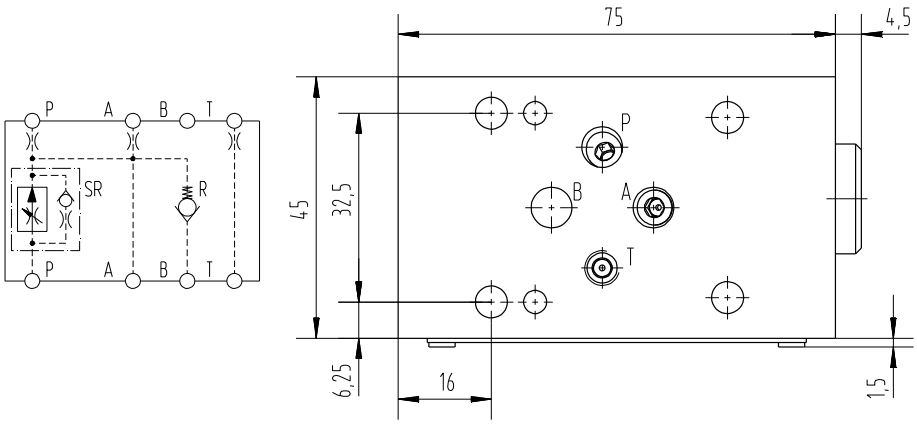

Alternative configurations for pilot valves that do not use port A.

It is recommended that pilot valves with no connection to port A be used in combination with a sandwich plate (P connected to A).

Standard:
Moog DB pilot valve + RM cover

Alternative:
DB pilot valve + sandwich cover + RM cover

Moog-DBD

RM cover

CKE

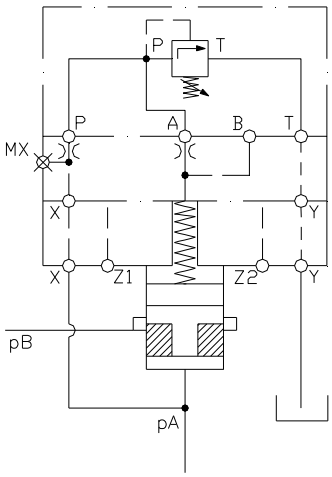

DBD

Sandwich plate

RM cover

CKE

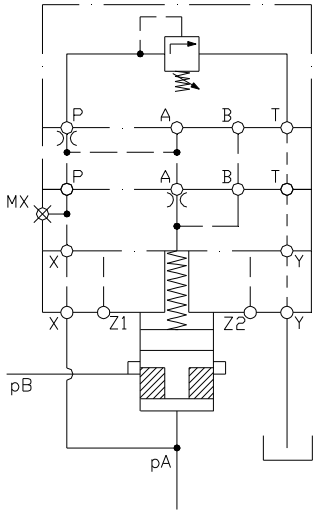

Valve configurations using a flow control sandwich plate, regardless of pilot valve; do not require any special sandwich plates.

Option: Sandwich cover (NB06) with connections from P and A (weight 0,7 kg)

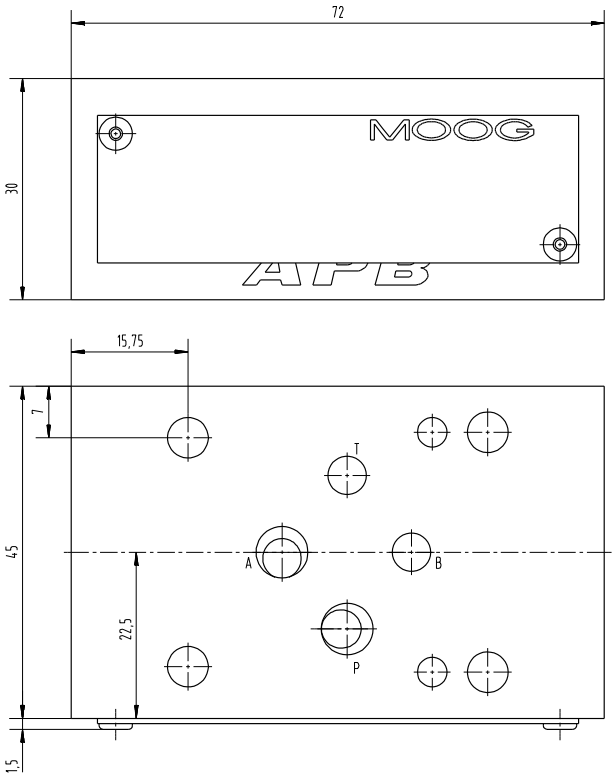

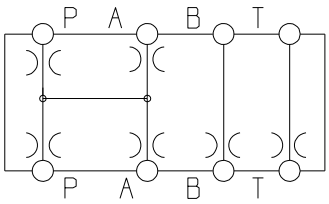

Ordering Information

M	-	D	MO	E	40	D	L	6	M	X	2	G	/	...

Seal material	
M	FPM/FKM + PUR

Valve type	
D	Pressure valve

Valve function	
KO	Pressure compensator, manual adjust
MO	Pressure reducing valve, manual adjust

Mounting	
E	Manifold mounting

Size	
16	NB16
25	NB25
32	NB32
40	NG40
50	NG50

Serial number	
D	

Spring	
R[1]	0,5 bar
L	3,0 bar
W	8,0 bar

[1] 0,5 bar spring only in combination with a flow control sandwich plate

Series	
6	Cavity according to ISO 7368

Options	
example: A10 = 1,0 orifice in port A of cover	
example: B12 = 1,2 orifice in port B of cover	
EP_	Pressure setting (adjustment 8 only)
MC_	With flow control valve sandwich cover

Spring pilot valve	
B	70 bar
E	175 bar
G	245 bar
K	350 bar

Adjustment	
2	Allen head screw with jam nut
8	Same as 2, with cap + safety

Pilot oil supply	
X	X and Y through mounting surface

Function	
M	normally open
N[2]	normally closed

[2] Version N (normally closed) only available upon request

Order Example

2/2-Way pressure reducing valve, NB 32, manual pressure adjustment, normally open

M-DMOE32DL6MX2B/A10;P12

M: seal material
FKM + PU

L: spring 3 bar

M: function „normally open“

A10: orifice 1,0 in port A of the cover
P12: orifice 1,2 in port P of the cover

B: spring pilot valve 0 - 70 bar

2: adjustment method 2
Allen head screw with jam nut

X: pilot oil supply
X and Y through mounting surface

Order Numbers

Pressure reducing valve with 3 or 8 bar spring (RM cover)

Function: normally open; Adjustment method 2, Spring pilot valve 350 bar, Seals PUR/FKM					
Symbol	Size	Spring	ZWD*	Type code	
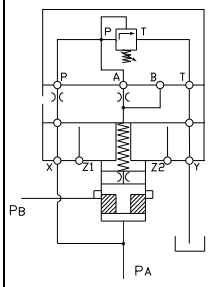	16	3 bar	-	M-DMOE16D**L**6MX2K	
		8 bar	×	M-DMOE16D**W**6MX2K	
	25	3 bar	-	M-DMOE25D**L**6MX2K	
		8 bar	×	M-DMOE25D**W**6MX2K	
	32	3 bar	-	M-DMOE32D**L**6MX2K	
		8 bar	×	M-DMOE32D**W**6MX2K	
	40	3 bar	-	M-DMOE40D**L**6MX2K	
		8 bar	×	M-DMOE40D**W**6MX2K	
	50	3 bar	×	M-DMOE50D**L**6MX2K	
		8 bar	-	not available	
*ZWD = sandwich cover required					

Pressure reducing valve with sandwich cover flow control valve (1W cover)

Function: normally open; Adjustment method 2, Spring pilot valve 350 bar, Seals PUR/FKM					
Symbol	Size	Spring	ZWD*	Type code	
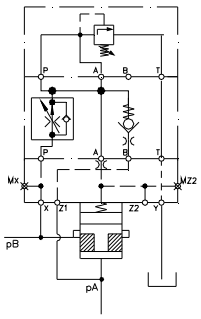	16	0,5 bar	-	M-DMOE16D**R**6MX2K/MC_	
	25	0,5 bar	-	M-DMOE25D**R**6MX2K/MC_	
	32	0,5 bar	-	M-DMOE32D**R**6MX2K/MC_	
	40	0,5 bar	-	M-DMOE40D**R**6MX2K/MC_	
	50	0,5 bar	-	M-DMOE50D**R**6MX2K/MC_	
* no sandwich cover required for these valve types					

As a recognized leader in motion control technologies, Moog offers a full range of services to support our products and ensure that they meet the expectations of customers. Moog experts are the best at helping customers select the right products and ensuring that they run reliably for a long time.

When it is time for new machine commissioning, refurbishment or routine maintenance, our engineers can help to optimize machine performance, minimize downtime and ensure the smooth application of our products.

Moog Authentic Repair Service™ is designed to provide the highest quality repair services using original equipment parts, the latest design specifications, and highly trained technicians. This ensures that our repaired products will run as well as when they were new.

With facilities in over 25 countries, Moog is committed to offering convenient local service to our customers.

Visit www.moog.com/industrial/worldwide to find the location nearest you for application engineering, repair, or field services.

FOR MORE INFORMATION VISIT
http://www.moog.com/industrial

MOOG.COM/INDUSTRIAL

For the office nearest you, contact us online at moog.com/industrial/globallocator.

Argentina	+54	(0) 11 4326 5916	info.argentina@moog.com
Australia	+61	(0) 3 9561 6044	info.australia@moog.com
Austria	+43	(0) 664 144 6580	info.austria@moog.com
Brazil	+55	(0) 11 35720400	info.brazil@moog.com
Canada	+1	716 652 2000	info.canada@moog.com
China	+86	(0) 21 2893 1600	info.china@moog.com
Finland	+358	(0) 104221840	info.finland@moog.com
France	+33	(0) 1 4560 7000	info.france@moog.com
Germany	+49	(0) 7031 622 0	info.germany@moog.com
Hong Kong	+852	2 635 3200	info.hongkong@moog.com
India	+91	(0) 80 4057 6605	info.india@moog.com
Ireland	+353	(0)21 451 9000	info.ireland@moog.com
Italy	+39	0 332 421111	info.italy@moog.com
Japan	+81	(0) 46 355 3767	info.japan@moog.com
Korea	+82	(0) 31 764 6711	info.korea@moog.com
Luxembourg	+352	40 46 401	info.luxembourg@moog.com
Netherlands	+31	(0) 252 462 000	info.netherlands@moog.com
Norway	+47	6494 1948	info.norway@moog.com
Russia	+7	8 31 713 1811	info.russia@moog.com
Singapore	+65	677 36238	info.singapore@moog.com
South Africa	+27	(0) 12 653 6763	info.southafrica@moog.com
Spain	+34	902 133 240	info.spain@moog.com
Sweden	+46	(0) 31 680 060	info.sweden@moog.com
Switzerland	+41	(0) 71 394 5010	info.switzerland@moog.com
United Kingdom	+44	(0) 168 429 6600	info.unitedkingdom@moog.com
USA	+1	(1) 716 652 2000	info.usa@moog.com

FLYER (E) DMO-D6_EN_01-2011.DOC